Instruction Manual

Sound Intensity Probe Type 50AI

G.R.A.S.
Sound & Vibration
Skovlytoften 33, 2840 Holte, Denmark
www.gras.dk

Sound-intensity Probe Type 50AI

Revision 6 June.2014

CONTENTS

1. Introduction and Description 3
1.1 Main Components 4
Microphones 4
Preamplifiers 5
1.2 Available Versions 6
2. Input Channels 9
2.1 Preamplifier Inputs A and B 9
2.2 Sound-intensity Axis 9
3. Output Socket 11
3.1 Use with Power Module Type 12AB 11
4. Handling and Assembling the Probe 12
4.1 The Microphones 12
4.2 Probe Design 12
4.3 Physical Strength 12
4.4 Assembling the Probe 12
4.5 Using the Windscreen 14
5. Specifications 16
5.1 All versions:. 16
5.2 Version B 16
5.3 Version C 16
5.4 Version D 17
5.5 Version HP 17
5.6 Version LD 17

1. Introduction and Description

The Sound-intensity Probe Type 50AI (Fig. 1.1) is a two-microphone sound intensity probe. It has a pair of G.R.A.S. phase-matched ½″ microphones Type 40AI (Fig. 1.2), two G.R.A.S. ¼″ microphone preamplifiers Type 26AA, solid spacers, remote control handle and connection cable. The probe is adjustable, durable and fully complies with the following requirements:

- IEC 61043, Electroacoustics - Instruments for the Measurement of Sound Intensity - Measurements with Pairs of Pressure Sensing Microphones, 1993 for Class 1 Sound-intensity probes.

Fig. 1.1 The Sound-intensity Probe Type 50AI

1.1 Main Components

The main components of the Sound-intensity Probe Type 50AI are:

- Sound Intensity Microphone Pair Type 40AK
- Two Microphone Preamplifiers Type 26AA
- Four solid spacers of various lengths and a spacer cup (see Fig. 1.5)
- Remote-control handle with (where applicable) up to two push buttons for controlling measurements

See also Fig. 1.8.

The Type 50AI is delivered in a carrying case similar to the one shown in Fig. 1.2, complete with microphones, preamplifiers, standard accessories and a remote-control handle.

Fig. 1.2 The type of carrying case delivered with the Type 50AI

1.1.1 Microphones

The microphones (Fig. 1.3) are high sensitivity, free-field ½″ condenser microphones with a uniquely-designed pressure equalization system that ensures extremely well defined phase characteristics. The microphones and preamplifiers are mounted on the end of the telescopic arm of the Remote-control handle. To cover the full frequency range from 50 Hz to 10 kHz, the Type 50AI is delivered with four solid interchangeable spacers for spacing the microphones at 12 mm, 25 mm, 50 mm and 100 mm.

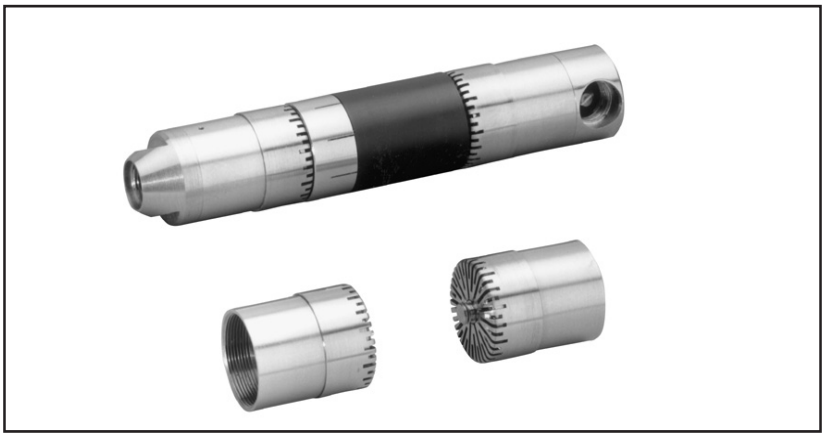

Fig. 1.3 Showing similar pairs of phase-matched ½" microphone cartridges
Above: Type 40AK, which includes spacers and three adapters for ¼" preamplifiers as supplied with the Type 50AI.
Below: Type 40AI, which includes cartridges only

1.1.2 Preamplifiers

The small ¼″ diameter and 40 mm long microphone preamplifiers (Fig. 1.4) are housed in robust, stainless steel casings which enable novel probe designs that reduce disturbances to the sound field otherwise brought about by the effects of shadows and diffraction. Symmetry of design enables reliable calibrations as described in the proposed standard (ISO/DIS 9614-2) for sound power measurements using sound-intensity measurements.

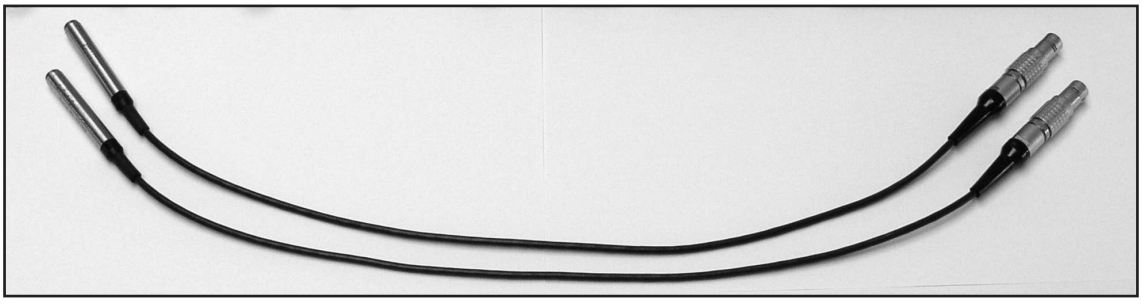

Fig. 1.4 Pair of ¼" Preamplifiers Type 26AA supplied with the Type 50AI

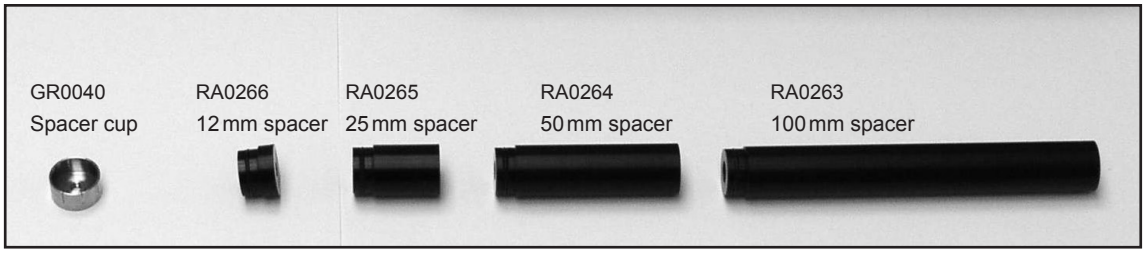

Fig. 1.5 Showing the various spacers and the spacer cup supplied with the Type 50AI

1.2 Available Versions

Various versions of the Type 50AI are available for direct use with a wide range of general-purpose frequency analysers as well as specialised sound intensity analysers. Fig. 1.6 shows the main external features of the various versions.

Type 50AI version B

Has built-in remote-control functions for direct connection to, and control of, sound-intensity measuring systems from a wide range of suppliers such as 01dB, Müller-BBM and Neutrix-Cortex.

Can be used directly with the G.R.A.S. Intensity Module Type 12AB (see also section 3.1), which provides all necessary voltages for the remote-control functions and powering the preamplifiers.

The Intensity Module Type 12AB (which is battery-operated) has two standard BNC output sockets for connecting to analysers that don't have special microphone-preamplifier inputs and a 9-pin D-sub socket wired up for connecting directly to the RS232 port of a computer (Fig. 3.2); thus enabling software to be controlled by the remote control facilities of this version of the Sound-intensity Probe.

Use with the Type 12AB enables direct use with 01dB Sound Intensity systems.

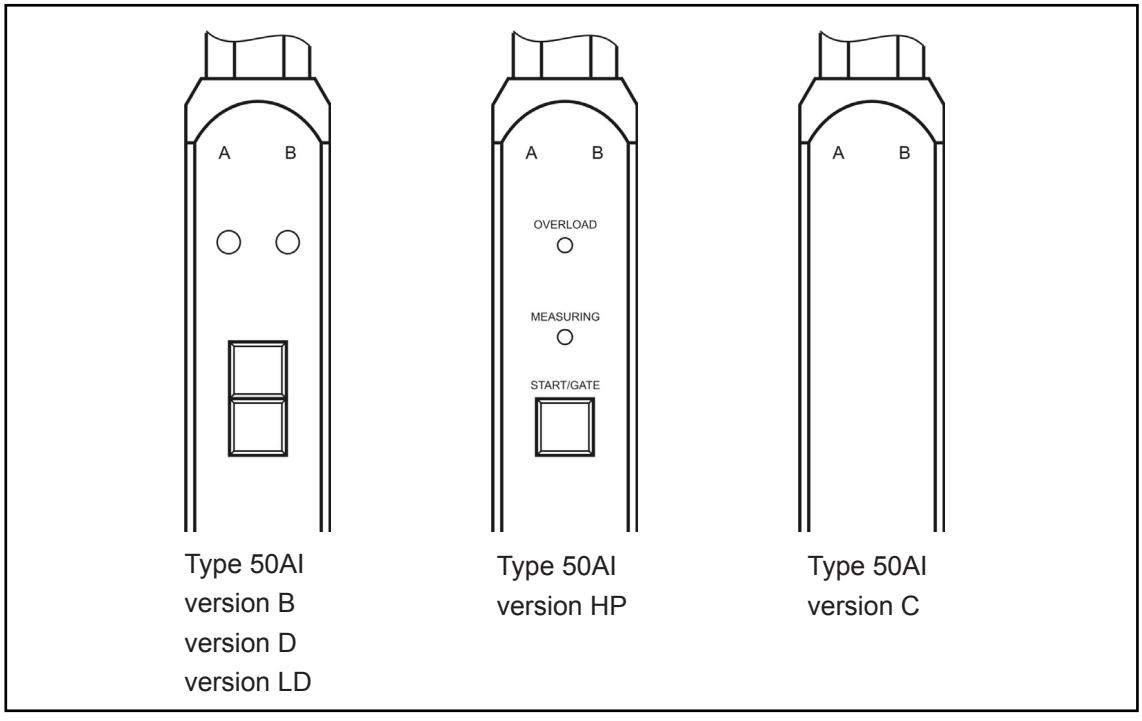

Fig. 1.6 Showing the markings and external features on the remote-control handles of the various versions of the Type 50AI

Type 50AI version C

Can be connected directly to any analyser with two standard 7-pin LEMO microphone-preamplifier inputs.

Can be used with the following G.R.A.S. Power Modules, which provide all necessary voltages for powering the preamplifiers:

- Intensity Module Type 12AB (see description above under version B)
- Power Module Type 12AA
  (via the included adapter cable AC0003, which splits the output from a 12-pin LEMO socket into two 7-pin LEMO plugs)

The Power Module Type 12AA (which is battery-operated) has two standard BNC output sockets for connecting to analysers that don't have special microphone-preamplifier inputs.

Type 50AI version D

Similar to version B but uses an internal 9-V battery (already fitted on delivery) for enabling its remote-control functions. Fig 1.7 shows how to gain access to the battery.

Type 50AI version HP

Has built-in remote-control functions for direct connection to, and control of, Hewlett-Packard analysers such as the types HP 3569A and HP 35670A Opt UK4.

Both of these analysers will support the LEDs marked OVERLOAD and MEASURING as well as the control button marked START/GATE.

Type 50AI version LD

Has built-in remote control functions for direct use and control of Larson Davis analysers such as the types LD2900 and LD3000.

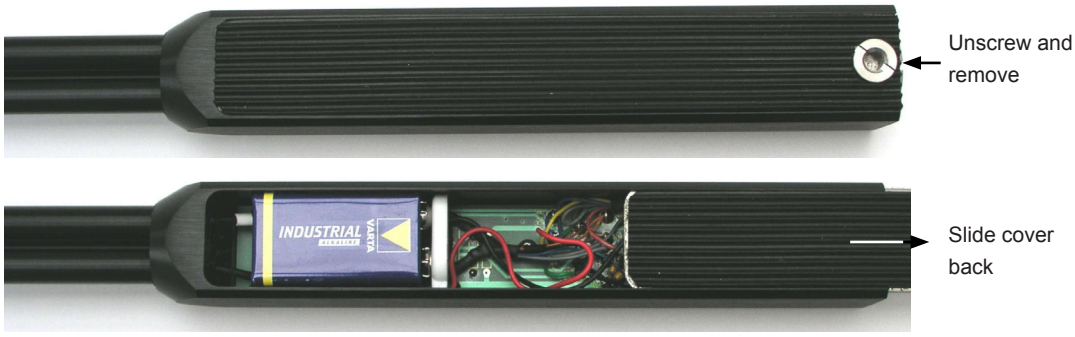

Fig. 1.7 Access to the 9-V battery located inside the remote-control handle of the Type 50AI version D. The battery should be disconnected / reconnected while inside the remote-control handle

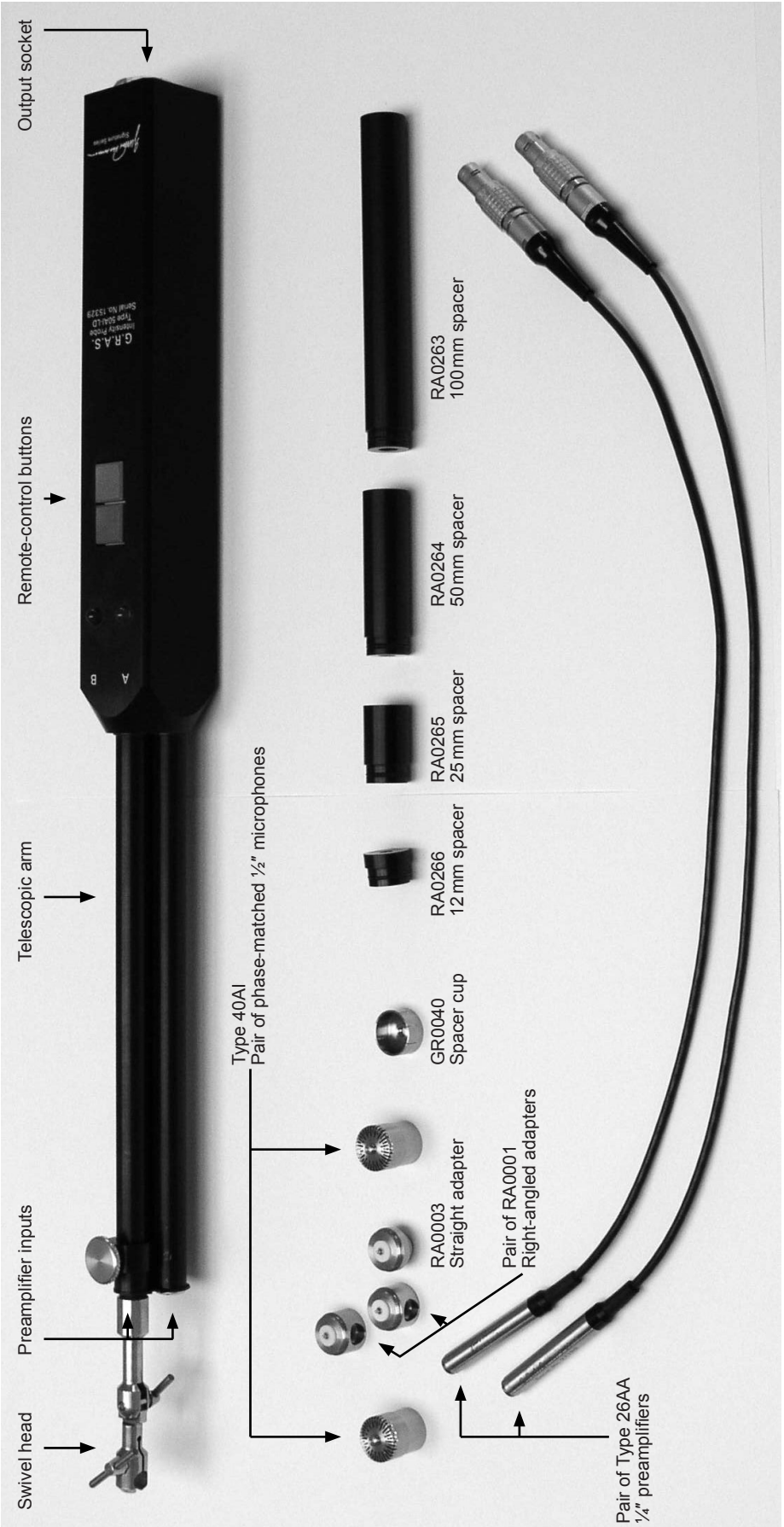

Fig. 1.8 Showing the main components of the Sound-intensity Probe Type 50AI prior to assembly

2. Input Channels

The Type 50AI has two input channels, one for each microphone preamplifier. The channels are marked A and B on the remote-control handle, see Fig. 2.1.

2.1 Preamplifier Inputs A and B

A and B refer to the two channels of the probe. Channel A is reserved for the leading microphone, i.e. the microphone first struck by an acoustic wave front (see Fig. 2.2). When this happens, this should be interpreted as a positive component of the sound intensity in the direction from microphone A to microphone B.

2.2 Sound-intensity Axis

Fig. 2.2 illustrates the origin and direction of positive sound-intensity vectors. This positive direction is always from microphones A to B.

The origin of the sound-intensity axis lies on the geometric centre of the pair of probe microphones.

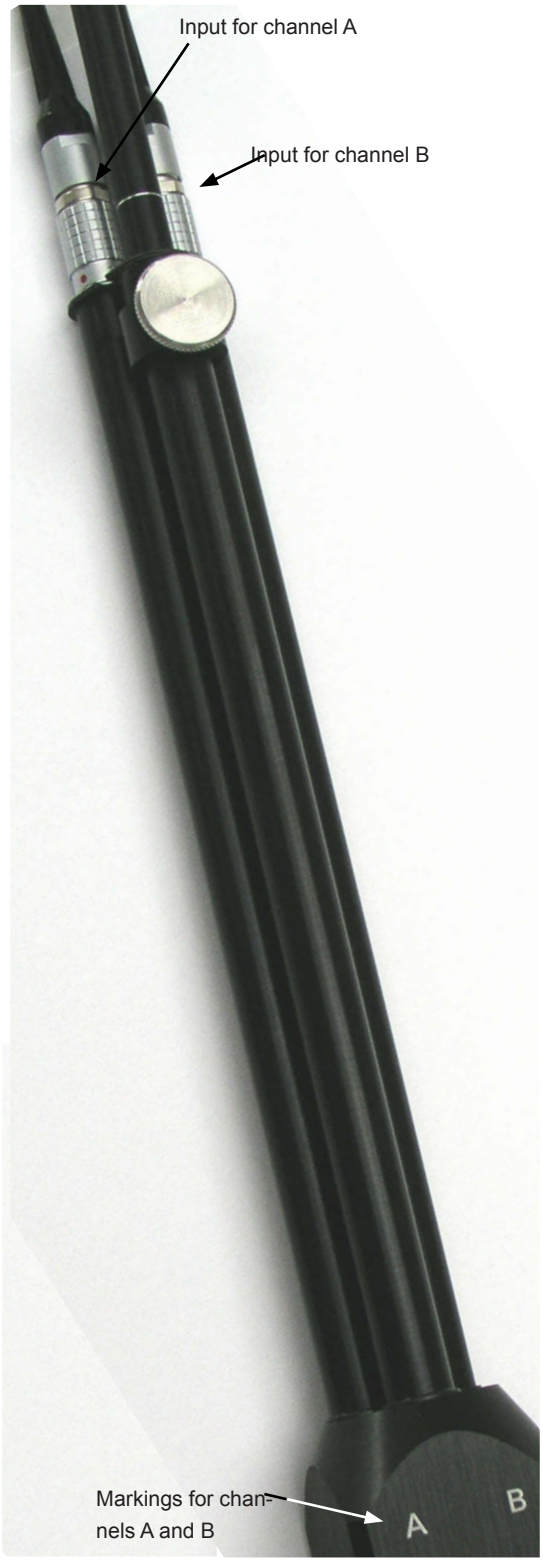

Fig. 2.1 Showing the inputs and markings for the two preamplifier inputs

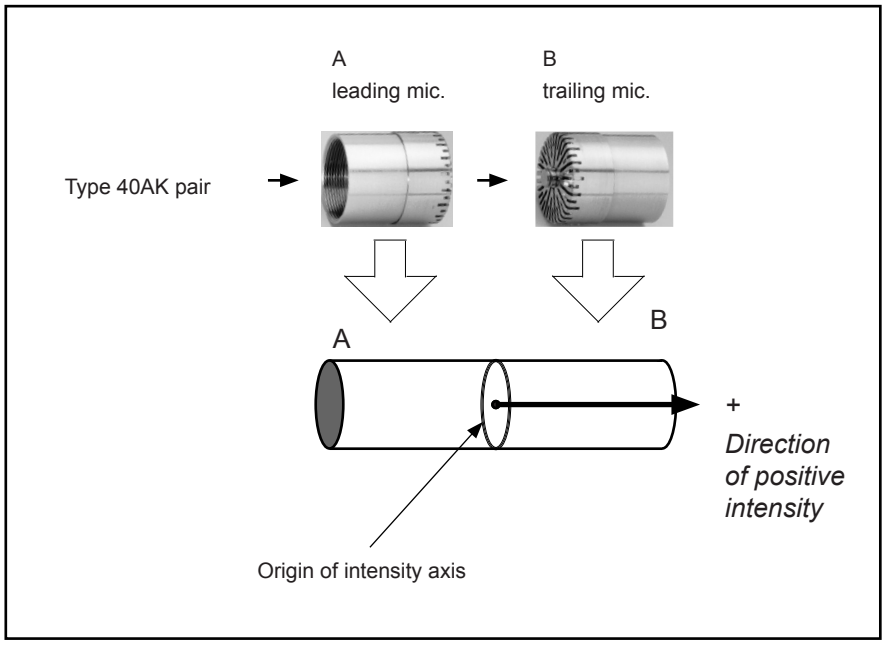

Fig. 2.2 Showing the microphones 'A' and 'B' which correspond with channels A and B respectively. 'A' is the leading microphone and is struck first by a sound wave

3. Output Socket

The pin connections of the LEMO output socket at the base of the Type 50AI are shown in Fig. 3.1. The four inner pins, i.e. 9, 10, 11 and 12 are for enabling a dialogue between a user and an analyser/computer via an RS232 port. They are used to:

a) Transmit the state (pressed/not pressed) of the two push buttons on the handle of the Type 50AI
When pressed:
the blue button transmits *Data Set Ready*
the grey button transmits *Clear To Send*

b) Signal the responses via the two LEDs also on the handle of the Type 50AI
When lit:
the red LED is signalling *Request To Send*
the white LED is signalling *Data Terminal Ready*

By suitably programming the analyser's/computer's software, measurements and data acquisition can be controlled interactively via the push buttons and LEDs.

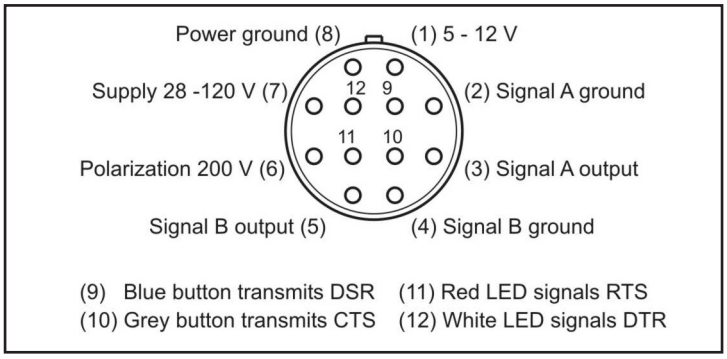

Fig. 3.1 12-pin LEMO female socket 1B (external view). The four inner pins are for connecting directly to an RS232 computer port

3.1 Use with Power Module Type 12AB

If the Type 50AI is used with a G.R.A.S. Power Module Type 12AB, pins 9, 10, 11 and 12 (Fig. 3.1) automatically have an outlet via the RS232 port of the Type 12AB (see Fig. 3.2) for further connection to an analyser/computer.

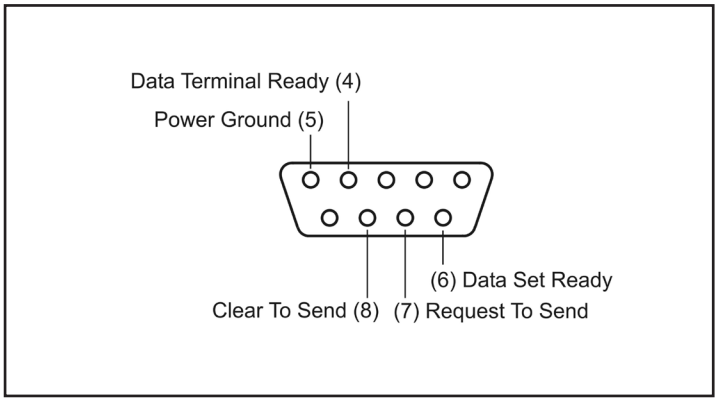

Fig. 3.2 9-pin female D-sub connector socket of the Power Module Type 12AB for connecting directly to an RS232 computer port (external view)

4. Handling and Assembling the Probe

4.1 The Microphones

The Microphones Type 40AI (Fig. 1.3) are a pair of special free-field microphones with extremely well-controlled phase characteristics. They are delivered as a matched pair each with individual calibration data as well as data on differences between their phase responses.

These microphones have a unique pressure equalisation system which ensures a well defined lower-limiting frequency and an extremely low sensitivity to sound pressures at the pressure equalisation channels. Therefore, they can be calibrated in single-port phase calibrators such as the G.R.A.S. Intensity Calibrator Type 51AB.

4.2 Probe Design

The design of the Sound-intensity Probe minimises acoustic reflections and the influence of diffraction. This has been achieved by removing any physical, reflective components from the sound path at 0° incidence. Since sound waves at 0° incidence are the main contributors to the total sound intensity level, it is important that disturbances in this direction be minimised.

The thin, 2 mm diameter preamplifier cables will have no influence on the sound field since they constitute a highly irregular surface with negligible reflections. The effects of acoustic diffraction and reflection from the physical parts of the Sound-intensity Probe are below 0.15 dB.

Microphones are supplied as pairs (Type 40AI) or as sets (Type 40AK) which include spacers and three preamplifier adapters (two right-angled and one straight).

The distances between microphones and preamplifiers have been kept to a minimum in order to avoid problems with any stray capacitance and sensitivity to vibration. While amplitude characteristics are little influenced, the phase characteristics of a Sound-intensity Probe can be critically affected by even very small vibrations in the conductors carrying the raw signals from the microphones. Therefore, the ¼″ preamplifiers are mounted in rigid contact with the ½″ microphones via short adapters (right-angled and/or straight). This also eliminates problems with non-matching capacitances between microphones and preamplifiers, which could give rise to phase problems.

4.3 Physical Strength

From a physical point of view, a Sound-intensity Probe should be robust and easy to assemble and dismantle. Typically, there are two points in a Sound-intensity Probe which can be identified as critical for physical strength and are the most likely to suffer damage and are the most difficult to repair. These points are the threads on microphones and preamplifiers as well as on the microphones' protection grids. The connections between microphones and preamplifiers are very delicate and carry both microphone signals and microphone polarisation voltages. Therefore, the preamplifier threads of the Type 50AI are supported by stainless steel ½″ to ¼″ adapters. There is also a protective guard within the ¼″ housing of each preamplifier. In addition, the microphones' protection grids are made of stainless steel to withstand rough physical treatment since a buckled or damaged protection grid will almost invariably damage a microphone's diaphragm beyond repair.

4.4 Assembling the Probe

The Sound-intensity Probe can be assembled in either a straight configuration or a symmetrical configuration The straight configuration (Fig. 4.1), is for intensity measurements close to surfaces and general source location measurements. The symmetrical configuration (Fig. 4.2), is ideal for sound power measurements, for example according to international standard ISO 9614-2 "Acoustics - Determination of sound power levels of noise sources using sound intensity" where a rotation test is required.

The probe on the Type 50AI consists of the parts shown in Fig. 4.4. Assemble as follows.

1. Mount one of the microphones on the Right-angled adapter RA0001 and the other microphone on either the other Right-angle adapter for a symmetrical probe or on the Straight adapter RA0003 for a straight-probe configuration.

   Remove the yellow protection caps from the two Preamplifiers Type 26AA and mount the microphone-adapter assemblies on the preamplifiers. Screw the Spacer cup GR0040 onto the protection grid of one of the microphones. Select an appropriate spacer (see Fig. 5.1 for working frequency ranges) from the four supplied and screw this onto the protection grid of the other microphone. In many cases, the 12 mm spacer RA0266 will be appropriate and will cover the frequency range from 100 Hz to 6.3 kHz *.

Fig. 4.1 Straight setup using the 25-mm spacer

Fig. 4.2 Symmetrical setup using the 12-mm spacer

* *According to the investigations of Jacobsen, Keith, and Krishnappa, diffraction effects at the intensity probe compensate for the insufficiencies of the finite difference approximation. The frequency range of intensity measurements may therefore be extended to frequencies up to 10kHz using ½" probes with a 12 mm spacer.*

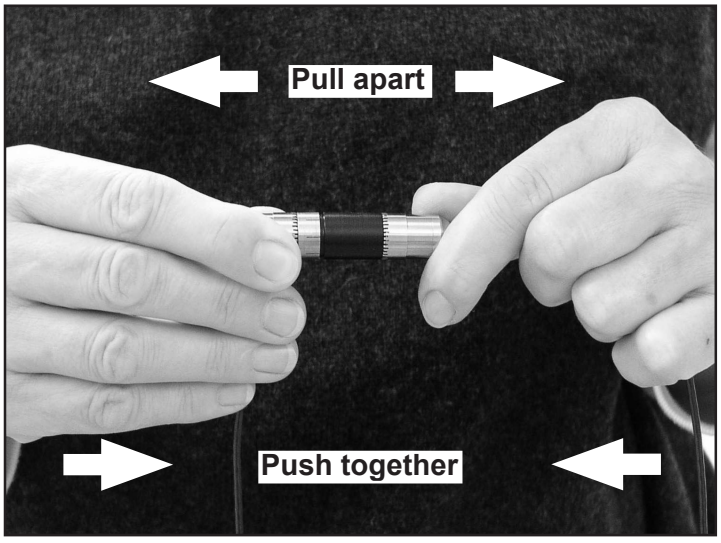

Fig. 4.3 Changing the spacer: Pull the two halves of the probe apart, unscrew the spacer from the microphone grid, screw another spacer on and push the two halves of the probe together again.

2. Now assemble the probe head by pressing the free end of the spacer (mounted on the one microphone) into the spacer cup mounted on the other microphone. To change the spacer, in order to cover a different frequency range, dismantle the probe head by pulling the spacer out of the spacer cup, unscrew the spacer and replace it with another one (see Fig. 4.3).
3. Mount the probe head by sliding one of the preamplifiers into the clamp (which can be locked at angles of 0°, 45°, 90°, 135° and 180°) at the top of the telescopic arm and tighten the finger screw (see the examples in Figs. 4.1 and 4.2). Connect the two preamplifiers to the input connectors at the top of the tubes shown in Fig. 2.1. The left input connector is labelled as channel A on the probe handle and the other input is labelled channel B. For the correct sign of the intensity vector, the front, or leading microphone should be connected to input channel A (see section 2.1).
4. Connect the probe to the analyser via the appropriate adapter cable (depending on the specific type of analyser). The functions of the operating buttons and indicating LEDs on the control handle are determined by the analyser in use and information about these should be found in the instruction manual of the given analyser (see also sections 1.2 and 3.1).

4.5 Using the Windscreen

The Sound-intensity Probe Type 50AI includes an elliptical windscreen (AI0001) which can be used whenever making outdoor measurements or when making indoor measurements in the presence of bulk air movements. Use it only when measurements are influenced by wind. It gives good protection at wind speeds greater than 0.5 m/s and can reduce pressure fluctuations caused by turbulence by as much as 20 dB with this technique of intensity measurements.

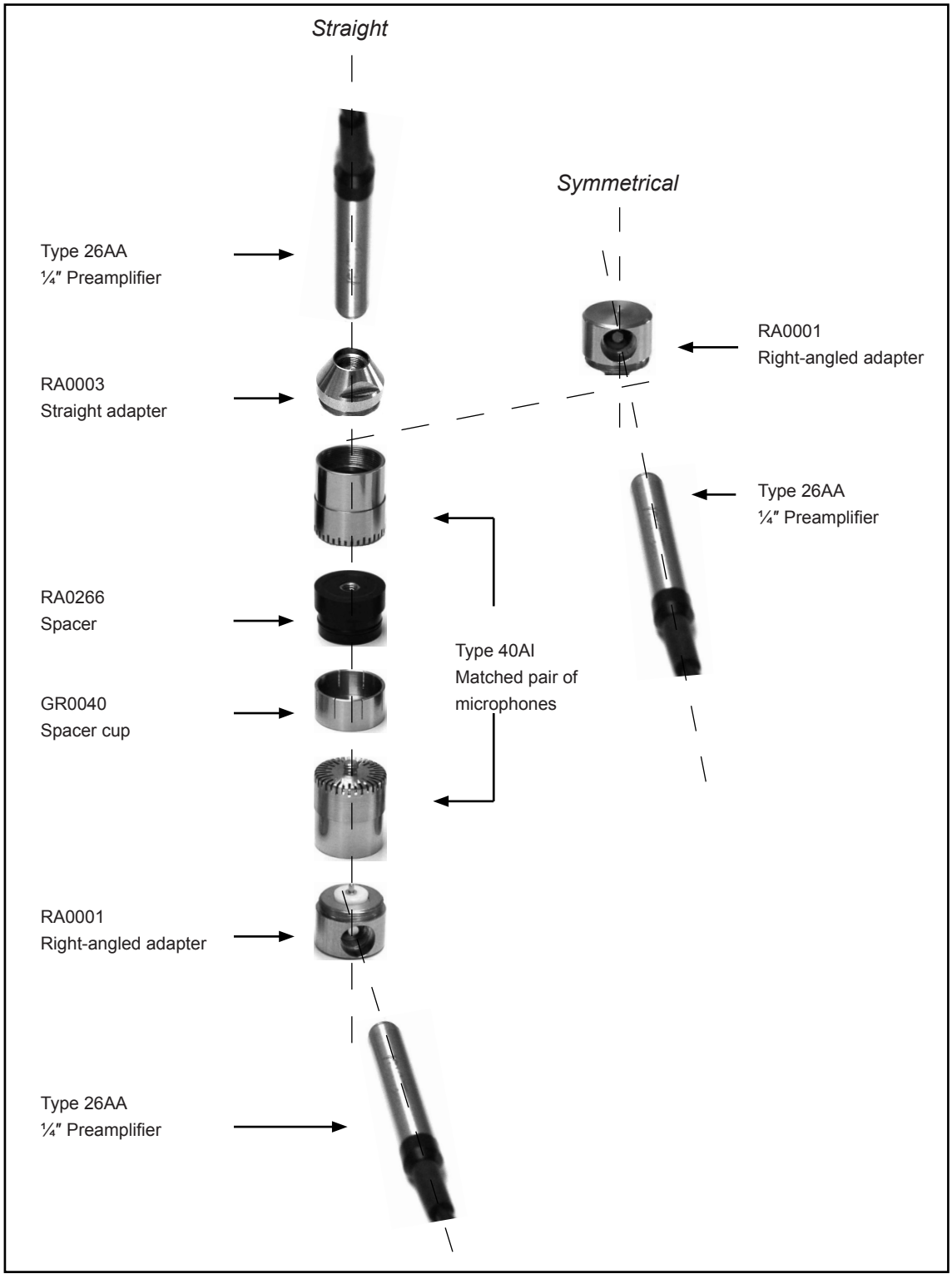

Fig. 4.4 Exploded view of probe assembly. On the left: straight setup. On the right the branch for a symmetrical setup

5. Specifications

5.1 All versions:

Sound-intensity microphone set Type 40AK comprising:

Matched pair ½″ mics.	Type 40AI
12 mm spacer	RA0266
25 mm spacer	RA0265
50 mm spacer	RA0264
100 mm spacer	RA0263

See Fig. 5.1 for working frequency ranges

Preamplifiers:

Pair ¼″	Type 26AA

with 4-pin LEMO connector type FGG OB

Frequency response and phase matching:

IEC 1043 Class 1

Operating Temperature Range:

+5 °C to +40 °C

Weight:

0.4 kg (0.9lbs) Version B

Accessories included:

Windscreen	AI0001

5.2 Version B

Remote-control handle:

Built-in remote control functions for 01dB analysers. Two buttons for averaging control and two LEDs for status indication and overload indication.

Accessories included:

5 m cable	AA0021
Adapter cable	AC0002 (12-pin LEMO to 2 x 7-pin LEMO, plus remote-control male 6-pin mini DIN plug)

5.3 Version C

Remote-control handle:

General-purpose intensity handle with two 7-pin LEMO 1B output connectors.

Accessories included:

5 m cable	AA0021
Adapter cable	AC0003 (12-pin LEMO to 2 x 7-pin LEMO)

5.4 Version D

Remote-control handle:

Similar to version B but uses an internal 9-V battery for enabling its remote-control functions.

Accessories included:

5 m cable	AA0021
Adapter cable	AC0005 (12-pin LEMO to 2 x 7-pin LEMO, plus remote-control female 9-pin D-sub plug)

5.5 Version HP

Remote-control handle:

Built-in remote control functions for Hewlett-Pakard analysers. One button for measurement control. LEDs for status indication and overload indication.

Accessories included:

3 m cable	AA0040
Adapter cable	AC0006 (12-pin LEMO to 2 x 7-pin LEMO, plus remote-control male 15-pin D-sub plug)

5.6 Version LD

Remote-control handle:

Built-in remote control functions for Larson Davies analysers (LD3000 or LD2900). One button for measurement control. LEDs for status indication and overload indication.

Accessories included:

5 m cable	AA0021
Adapter box	AC0007 (for LD3000)
or	AC0004 (for LD2900)

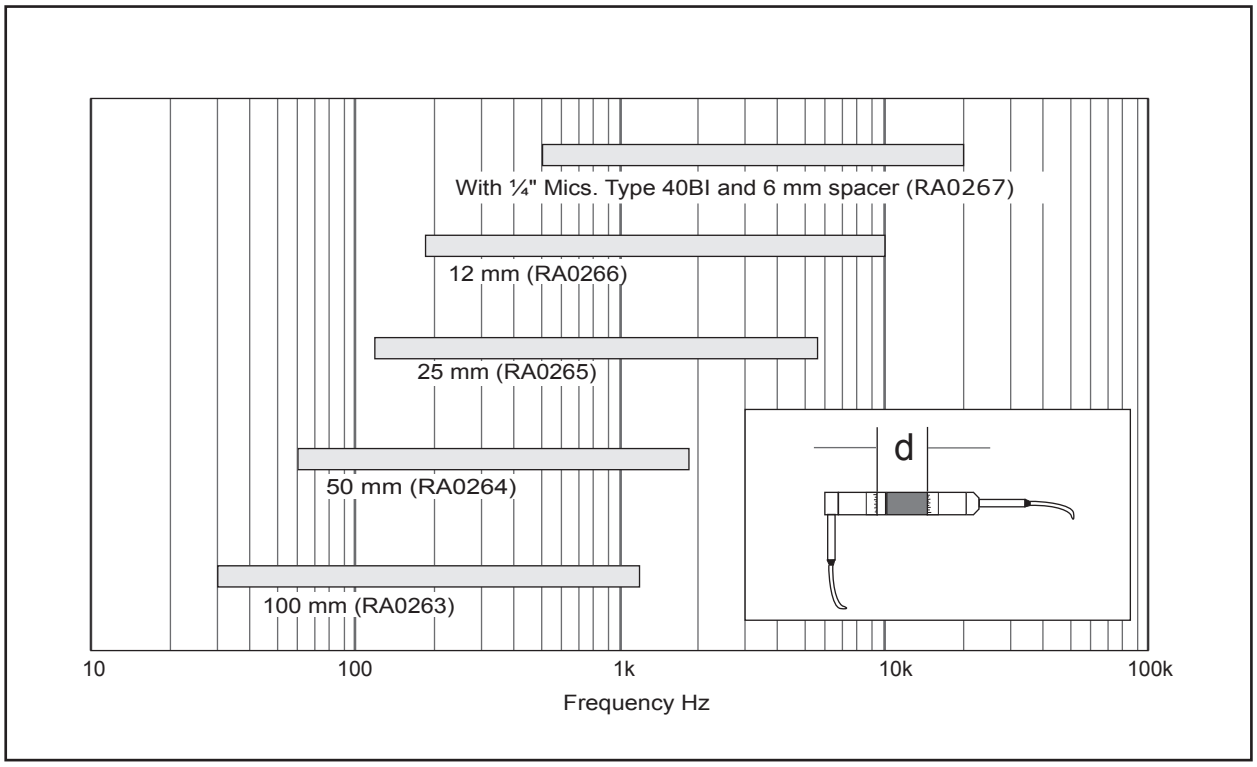

Fig. 5.1 Working frequency ranges covered by the various spacer lengths. The top bar is for the case when a Type 50AI is equipped with a pair of ¼" intensity microphones (Type 40BI) and a 6 mm spacer (note the extended high-frequency range).

Manufactured to conform with:

CE marking directive:
93/68/EEC

WEEE directive:
2002/96/EC

RoHS directive:
2002/95/EC

G.R.A.S. Sound & Vibration continually strives to improve the quality of our products for our customers; therefore, the specifications and accessories are subject to change.